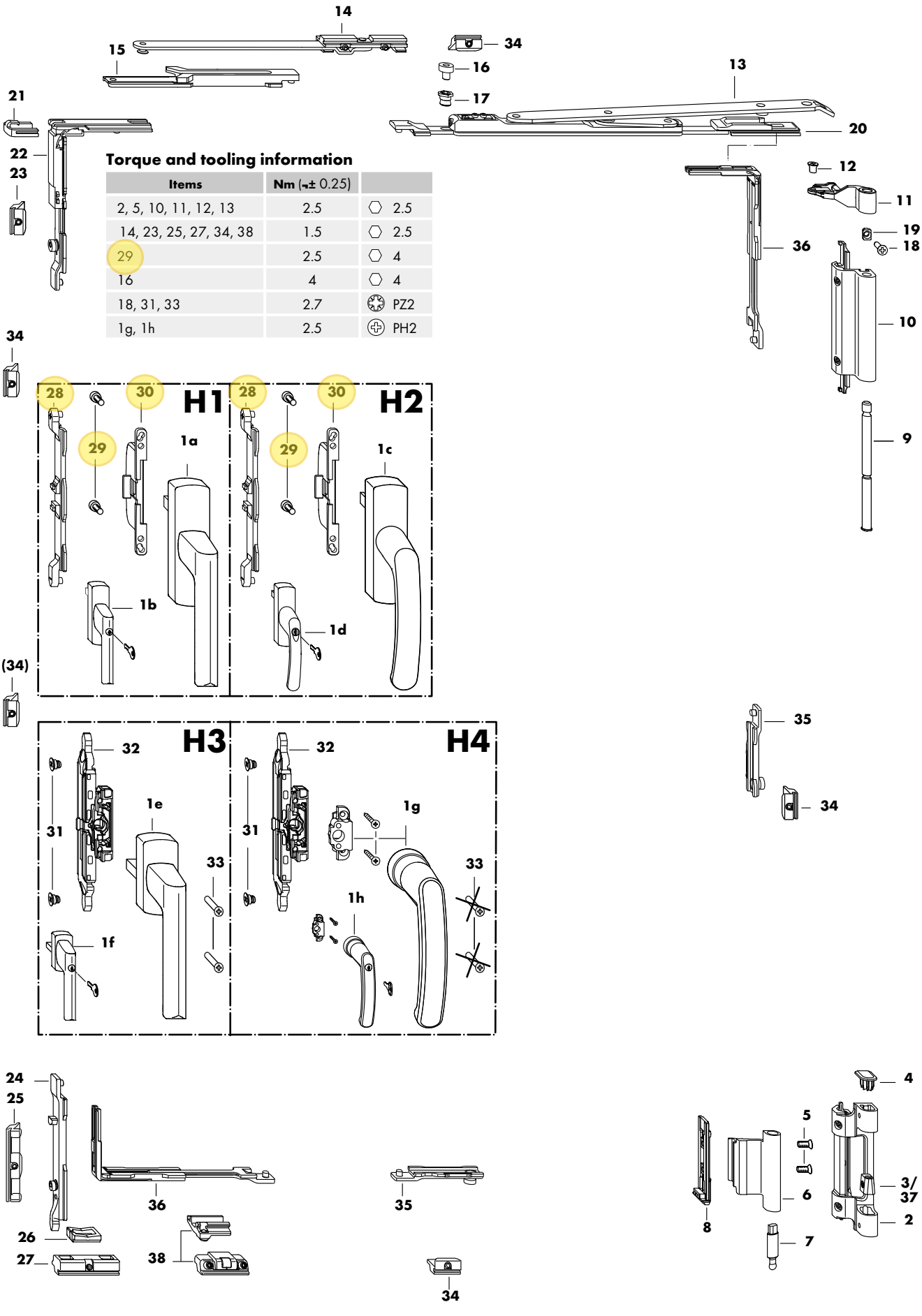


**Torque and tooling information**

| Items | Nm (¬± 0.25) | |
|---|---|---|
| 2, 5, 10, 11, 12, 13 | 2.5 | ⬡ 2.5 |
| 14, 23, 25, 27, 34, 38 | 1.5 | ⬡ 2.5 |
| 29 | 2.5 | ⬡ 4 |
| 16 | 4 | ⬡ 4 |
| 18, 31, 33 | 2.7 | PZ2 |
| 1g, 1h | 2.5 | PH2 |

## Observe installation sequence

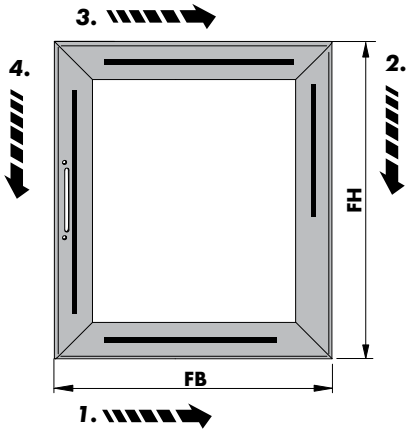


Sequence of installation in sash
- without centre lock (**3. - 4.**)
- with centre lock (**1. - 2. - 3. - 4.**)

## Design variants for coupling set (items 28-30) (H1/H2)

| USH | X | Material no. |
|---|---|---|
| 7 - 10 mm | ≤ 8.5 mm | MMKL0030-100030 |
| 7 - 10 mm | ≤ 7.5 mm | MMKL0010-100030 |
| 12 mm | ≤ 7 mm | MMKL0040-100030 |

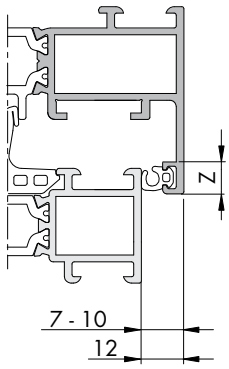


## Assembly settings and installation sequence ① to ④

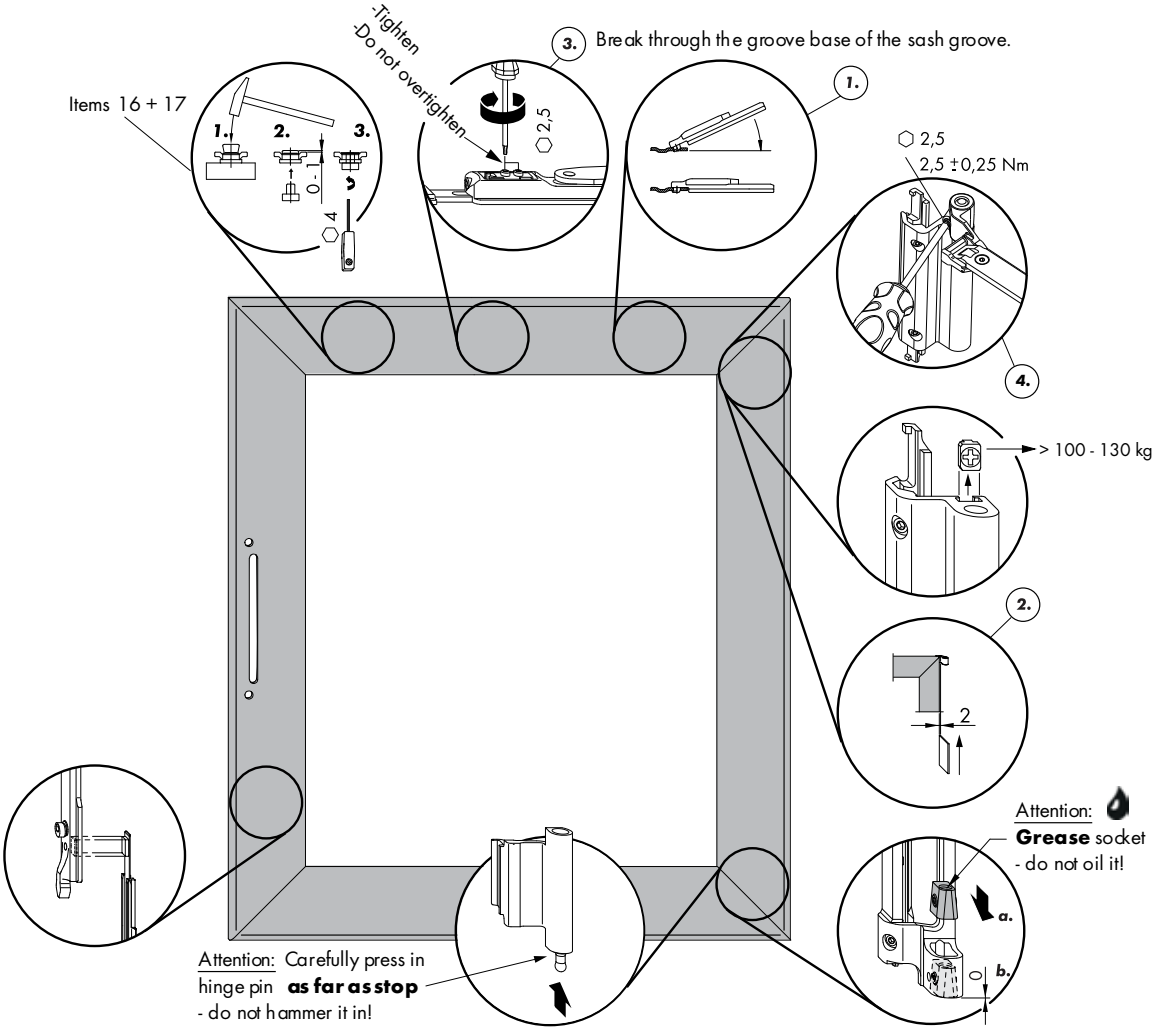




Klik op een artikelnummer om het artikel op kozijnparts.nl te bekijken. Blauw onderstreept = klikbaar.

# ***LM 4200-DK*** *Hardware list*

| | Item | Design Left | Design Right | Description | | | Material no. | | Material no. |
|---|---|---|---|---|---|---|---|---|---|
| | 1 | | 1 | **Handle LM** | | | See handle overview LM | Drawing no.: LMen1337 | |
| *Generally required* | 2-11 | | 1 | **BS LM 4200** | **Silver** | 1 | **MMBS0010-525010** | 10 | **MMBS0010-525020** |
| | | | 1 | | **Brown** | 1 | **MMBS0010-533010** | 10 | **MMBS0010-533020** |
| | | | 1 | | **White** *RAL 9010* | 1 | **MMBS0010-503010** | 10 | **MMBS0010-503020** |
| | | | 1 | | **White** *RAL 9016* | 1 | **MMBS0010-504010** | 10 | **MMBS0010-504020** |
| | | | 1 | | **Black** *RAL 9005* | 1 | **MMBS0010-523010** | 10 | **MMBS0010-523020** |
| | | | 1 | | **EV1** | 1 | **MMBS0010-524010** | 10 | **MMBS0010-524020** |
| | | | 1 | | **Mill finish** | – | – | 5 | **246887** |
| | 12-17 | – | 1 | **BS LM 4200/SV right** | **Silver** | 1 | **MMBS0031-525011** | 10 | **MMBS0031-525021** |
| | | – | 1 | | **Brown** | 1 | **MMBS0031-533011** | 10 | **MMBS0031-533021** |
| | | – | 1 | | **White** *RAL 9016* | 1 | **MMBS0031-504011** | 10 | **MMBS0031-504021** |
| | | – | 1 | | **Black** *RAL 9005* | 1 | **MMBS0031-523011** | 10 | **MMBS0031-523021** |
| | | 1 | – | **BS LM 4200/SV left** | **Silver** | 1 | **MMBS0032-525011** | 10 | **MMBS0032-525021** |
| | | 1 | – | | **Brown** | 1 | **MMBS0032-533011** | 10 | **MMBS0032-533021** |
| | | 1 | – | | **White** *RAL 9016* | 1 | **MMBS0032-504011** | 10 | **MMBS0032-504021** |
| | | 1 | – | | **Black** *RAL 9005* | 1 | **MMBS0032-523011** | 10 | **MMBS0032-523021** |
| | 18-19 | 0...1 | | **Accessories LM 4200 130 kg** | *Sash weight 100 kg and up* | 1 | – | 20 | **247037** |
| | 20 | 1 | | **Stay LM 4200**<br>*1) up to max. 100 kg sash weight* | *Size* 20[1)] | *a (in mm)* 365 to 600 | 1 | **884805** | 20 | **273098** |
| | | | | | 35 | 601 to 1,250 | 1 | **884782** | 20 | **314203** |
| | | | | *2) with additional stay LM* | 35[2)] | 1,251 to 1,600 | 1 | **884782** | 20 | **314203** |
| | | | | *3) 100 - 130 kg with additional stay LM* | 35[3)] | 1,020 to 1,600 | 1 | **884782** | 20 | **314203** |
| | 21-28 | 0...1 | | **VS LM-DK FBS-EUL KPS** | | | 1 | **MMVS0310-100010** | 20 | **MMVS0310-100030** |
| | | 0...1 | | **VS LM-DK KPS** | | | 1 | **MMVS0250-100010** | 20 | **MMVS0250-100030** |
| | 29-30 | 1 | | **Coupling set LM A0156** | | | 1 | **MMKL0060-100010** | 20 | **MMKL0060-100030** |
| | 31-33 | 0...1 | | **Coupling set FBS-G 9 mm** | | | 1 | **MMKL0030-100010** | 20 | **MMKL0030-100030** |
| | | 0...1 | | **10 mm** | | | 1 | **MMKL0010-100010** | 20 | **MMKL0010-100030** |
| | | 0...1 | | **USH 12 mm** | | | 1 | **MMKL0040-100010** | 20 | **MMKL0040-100030** |
| | 34-36 | 0...2 | | **MV LM 4200-DK** | *a/b ≥ 1,250 mm* | | 1 | **857045** | 20 | **246979** |
| | 37-40 | 0...1 | | **Additional stay LM 4200** | *a ≥ 1,251 mm with stay SZ 35 (> 100 kg a ≥ 1,020 mm)* | | 1 | **857076** | 10 | **247006** |
| ***Accessories*** | | | | | | | | | | |
| | 41 | 0...1 | | **Handle support LM** | *Only for use with VS LM-DK FBS-EUL KPS* | | – | – | 200 | *See table* |
| | 42 | 0...1 | | **Pressure piece SV** *(only for BS LM 4200)* | *For width adjustment ± 0.8 mm* | | 1 | **818138** | 20 | **222041** |
| | 43 | 0...1 | | **Pressure piece AV** *(only for BS LM 4200)* | *For width pressure adjustment ± 0.5 mm* | | 1 | **855133** | 20 | **249796** |

## Design variations for coupling set FBS-G (31 - 33)

| USH | X | Material no. |
|---|---|---|
| 7 - 10 mm | ≤ 8.5 mm | MMKL0030-100030 |
| 7 - 10 mm | ≤ 7.5 mm | MMKL0010-100030 |
| 12 mm | ≤ 7 mm | MMKL0040-100030 |

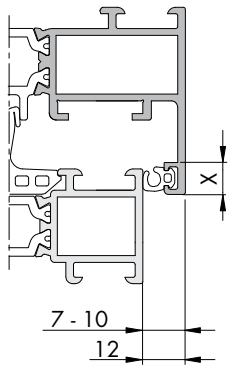


## Design variations for handle support (41)

| USH | Z | X _ < 7 mm | X 7.1 - 8.5 mm |
|---|---|---|---|
| 7 - 10 mm | < 2 mm | MFHA0010-100200 | MFHA0010-100200 |
| 7 - 10 mm | 2.1 - 3 mm | MFHA0010-100200 | MFHA0020-100200 |
| 7 - 10 mm | > 3 mm | MFHA0010-100200 | - |
| 12 mm | - | MFHA0030-100200 | - |

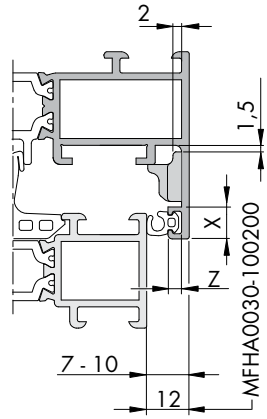





Klik op een artikelnummer om het artikel op kozijnparts.nl te bekijken. Blauw onderstreept = klikbaar.

# Nederlandse vertaling

Siegenia - Nederlandse vertaling

Bron: Siegenia ALU-planningshandboek LM 5200 / LM 4200 / axxent (Engels), Duits, blz. 45, 47, 124. Vertaling Kozijn Parts.

**Dit artikel: MMKL0010-100010 (in de bladen hiervoor geel gemarkeerd)**

## Siegenia handboek blz. 45 - ALU 5200-DK BD 3.5 (FBS-G), Hardware overview

| | |
|---|---|
| **Hardware overview ALU 5200-DK BD 3.5 (FBS-G)** | beslagoverzicht ALU 5200 draai-kiep, scharnierdoorgang 3,5 mm, met anti-foutbediening bij de kruk (FBS-G) |
| **H1 / H2: items 28, 29, 30 = coupling set (coupling bracket, cheese head screws, mishandling device)** | H1 / H2 (kruk Si-line of Globe): posities 28, 29, 30 = koppelset (koppelbeugel, cilinderschroeven, anti-foutbediening) |
| **H3 / H4: gear set FBS** | H3 / H4: kruk met ingefreesde aandrijving met anti-foutbediening |
| **Torque and tooling information** | aanhaalmomenten en gereedschap |

## Siegenia handboek blz. 47 - ALU 5200-DK BD 3.5 (FBS-G), Assembly and design variants for coupling set

| | |
|---|---|
| **Design variants for coupling set (items 28-30) (H1/H2): USH / X / Material no.** | uitvoeringen koppelset (posities 28-30) bij kruk H1/H2: overslaghoogte vleugel (USH) / maat X / artikelnummer |
| **7 - 10 mm / ? 8.5 mm / MMKL0030-100030** | overslag 7-10 mm, maat X max. 8,5 mm: MMKL0030 (9 mm) |
| **7 - 10 mm / ? 7.5 mm / MMKL0010-100030** | overslag 7-10 mm, maat X max. 7,5 mm: MMKL0010 (10 mm) |
| **12 mm / ? 7 mm / MMKL0040-100030** | overslag 12 mm, maat X max. 7 mm: MMKL0040 (USH 12 mm) |
| **Observe installation sequence; sequence of installation in sash** | let op de montagevolgorde in de vleugel (zonder middensluiting 3-4, met middensluiting 1-2-3-4) |
| **Attention: carefully press in hinge pin as far as stop - do not hammer it in! Grease socket - do not oil it!** | let op: scharnierpen voorzichtig tot de aanslag indrukken, niet inslaan; smeernippel invetten, niet oliën |

## Siegenia handboek blz. 124 - LM 4200-DK Hardware list (LMen1362 blz. 3)

| | |
|---|---|
| **31-33 0...1 Coupling set FBS-G 9 mm MMKL0030 / 10 mm MMKL0010 / USH 12 mm MMKL0040 (1 piece -100010, 20 pieces -100030)** | pos. 31-33, optioneel: koppelset met anti-foutbediening bij de kruk, 9 / 10 / 12 mm (per stuk -100010, per 20 -100030) |
| **Design variations for coupling set FBS-G (31 - 33): USH / X** | uitvoeringen koppelset: kies op overslaghoogte (USH) en maat X, zie de tabel |
| **21-28 VS LM-DK FBS-EUL KPS / VS LM-DK KPS** | pos. 21-28: sluitzijde-set draai-kiep (met of zonder anti-foutbediening in de hoekoverbrenger) |
| **Stay LM 4200 / additional stay / MV / pressure pieces** | schaar, extra schaar, middensluiting, drukstukken |

Vertaling door Kozijn Parts van de originele fabrikantpagina's hiervoor. Bij verschil geldt de originele tekst van de fabrikant.

Klik op een artikelnummer om het artikel op kozijnparts.nl te bekijken. Blauw onderstreept = klikbaar.