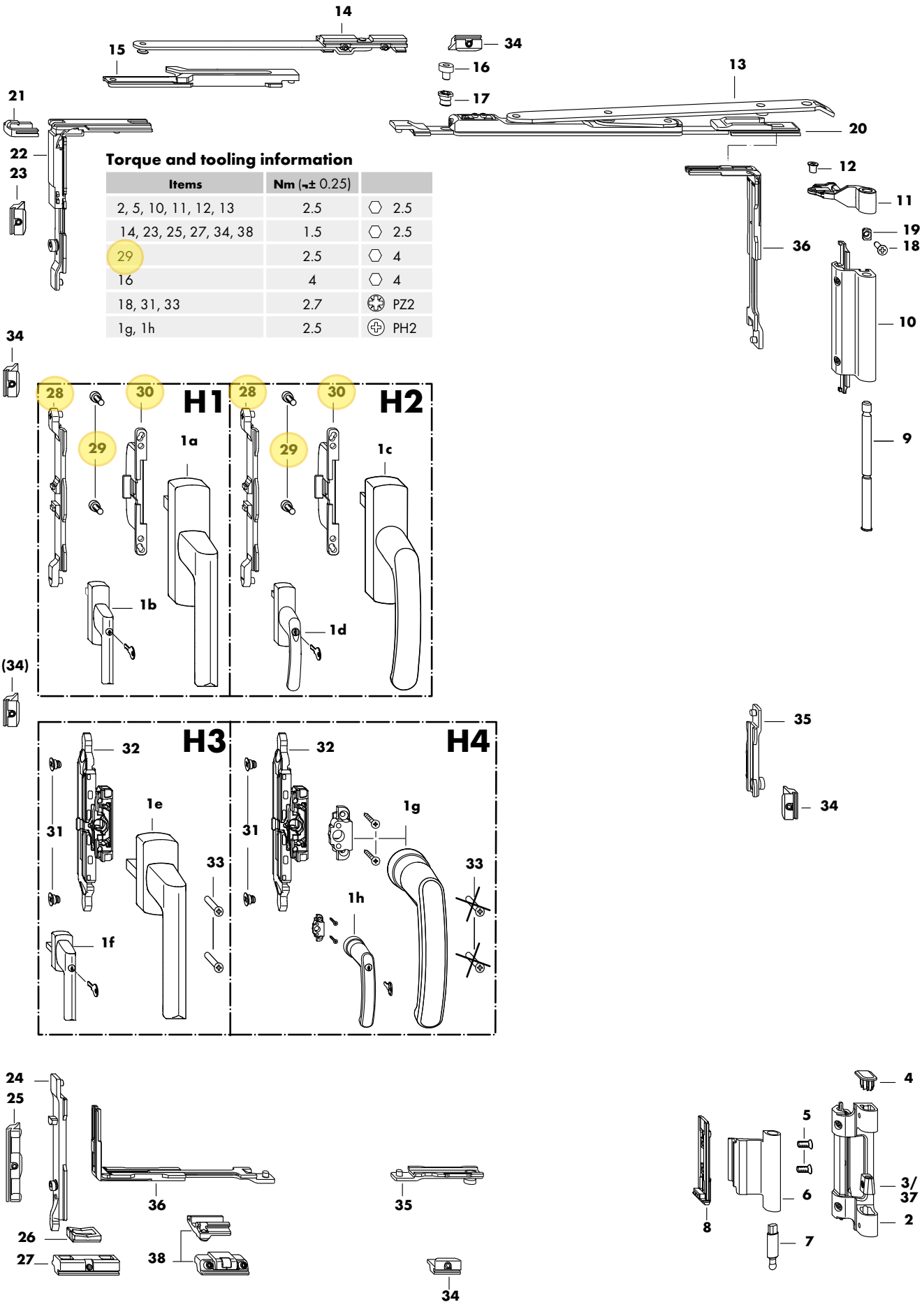

Torque and tooling information

Items	Nm (¬± 0.25)	
2, 5, 10, 11, 12, 13	2.5	⬡ 2.5
14, 23, 25, 27, 34, 38	1.5	⬡ 2.5
29	2.5	⬡ 4
16	4	⬡ 4
18, 31, 33	2.7	PZ2
1g, 1h	2.5	PH2

Observe installation sequence

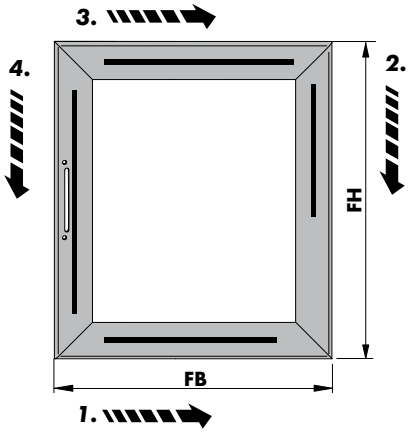

Sequence of installation in sash
- without centre lock (**3. - 4.**)
- with centre lock (**1. - 2. - 3. - 4.**)

Design variants for coupling set (items 28-30) (H1/H2)

USH	X	Material no.
7 - 10 mm	≤ 8.5 mm	MMKL0030-100030
7 - 10 mm	≤ 7.5 mm	MMKL0010-100030
12 mm	≤ 7 mm	MMKL0040-100030

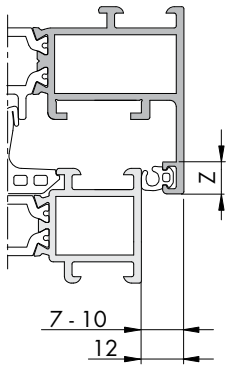

Assembly settings and installation sequence ① to ④

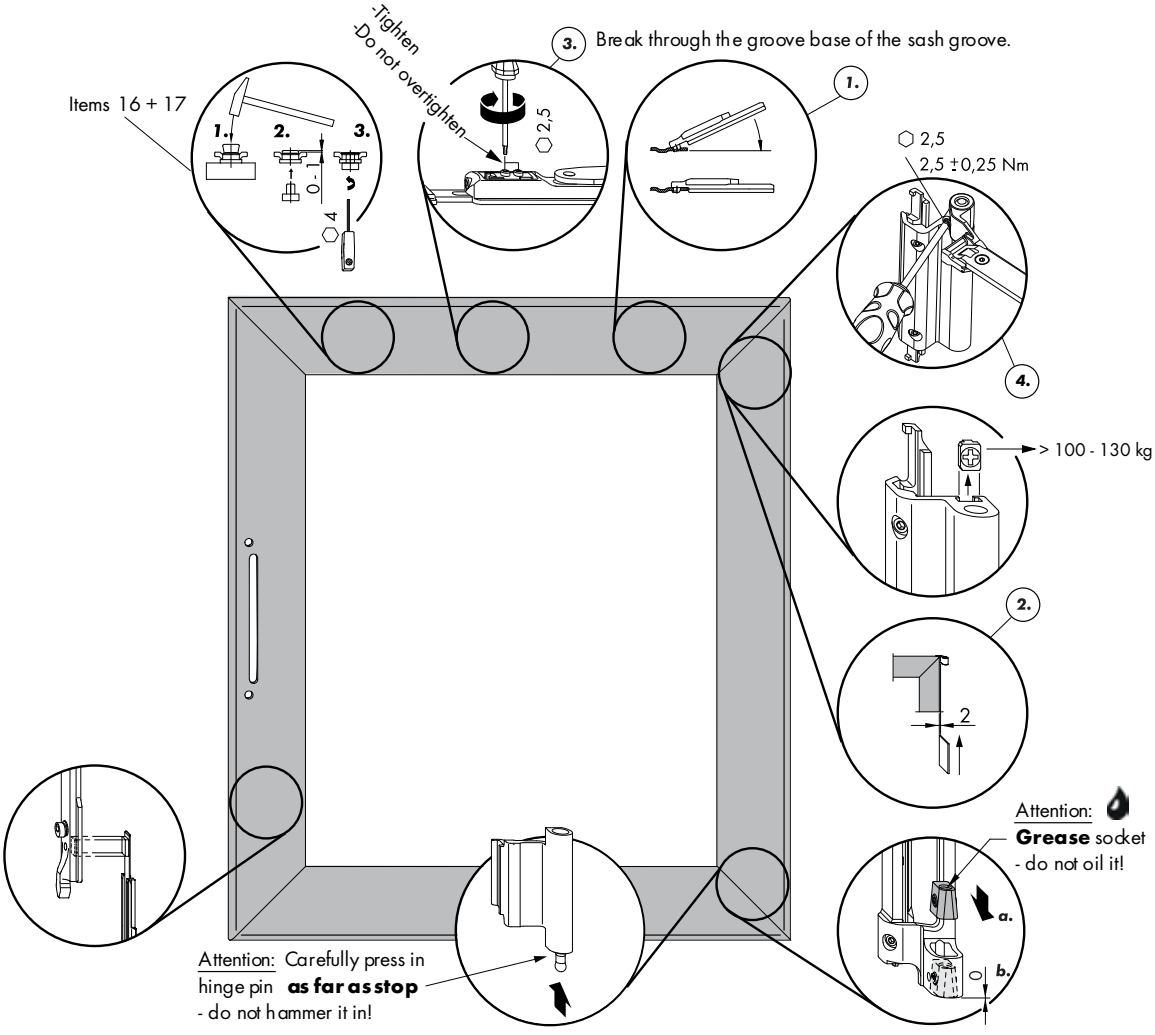

Klik op een artikelnummer om het artikel op kozijnparts.nl te bekijken. Blauw onderstreept = klikbaar.

LM 4200-DK *Hardware list*

	Item	Design Left	Design Right	Description			Material no.		Material no.
	1		1	**Handle LM**			See handle overview LM	Drawing no.: LMen1337	
Generally required	2-11		1	**BS LM 4200**	**Silver**	1	**MMBS0010-525010**	10	**MMBS0010-525020**
			1		**Brown**	1	**MMBS0010-533010**	10	**MMBS0010-533020**
			1		**White** *RAL 9010*	1	**MMBS0010-503010**	10	**MMBS0010-503020**
			1		**White** *RAL 9016*	1	**MMBS0010-504010**	10	**MMBS0010-504020**
			1		**Black** *RAL 9005*	1	**MMBS0010-523010**	10	**MMBS0010-523020**
			1		**EV1**	1	**MMBS0010-524010**	10	**MMBS0010-524020**
			1		**Mill finish**	–	–	5	**246887**
	12-17	–	1	**BS LM 4200/SV right**	**Silver**	1	**MMBS0031-525011**	10	**MMBS0031-525021**
		–	1		**Brown**	1	**MMBS0031-533011**	10	**MMBS0031-533021**
		–	1		**White** *RAL 9016*	1	**MMBS0031-504011**	10	**MMBS0031-504021**
		–	1		**Black** *RAL 9005*	1	**MMBS0031-523011**	10	**MMBS0031-523021**
		1	–	**BS LM 4200/SV left**	**Silver**	1	**MMBS0032-525011**	10	**MMBS0032-525021**
		1	–		**Brown**	1	**MMBS0032-533011**	10	**MMBS0032-533021**
		1	–		**White** *RAL 9016*	1	**MMBS0032-504011**	10	**MMBS0032-504021**
		1	–		**Black** *RAL 9005*	1	**MMBS0032-523011**	10	**MMBS0032-523021**
	18-19	0...1		**Accessories LM 4200 130 kg**	*Sash weight 100 kg and up*	1	–	20	**247037**
	20	1		**Stay LM 4200** *1) up to max. 100 kg sash weight*	*Size* 20[1)]	*a (in mm)* 365 to 600	1	**884805**	20	**273098**
					35	601 to 1,250	1	**884782**	20	**314203**
				2) with additional stay LM	35[2)]	1,251 to 1,600	1	**884782**	20	**314203**
				3) 100 - 130 kg with additional stay LM	35[3)]	1,020 to 1,600	1	**884782**	20	**314203**
	21-28	0...1		**VS LM-DK FBS-EUL KPS**			1	**MMVS0310-100010**	20	**MMVS0310-100030**
		0...1		**VS LM-DK KPS**			1	**MMVS0250-100010**	20	**MMVS0250-100030**
	29-30	1		**Coupling set LM A0156**			1	**MMKL0060-100010**	20	**MMKL0060-100030**
	31-33	0...1		**Coupling set FBS-G 9 mm**			1	**MMKL0030-100010**	20	**MMKL0030-100030**
		0...1		**10 mm**			1	**MMKL0010-100010**	20	**MMKL0010-100030**
		0...1		**USH 12 mm**			1	**MMKL0040-100010**	20	**MMKL0040-100030**
	34-36	0...2		**MV LM 4200-DK**	*a/b ≥ 1,250 mm*		1	**857045**	20	**246979**
	37-40	0...1		**Additional stay LM 4200**	*a ≥ 1,251 mm with stay SZ 35 (> 100 kg a ≥ 1,020 mm)*		1	**857076**	10	**247006**
Accessories										
	41	0...1		**Handle support LM**	*Only for use with VS LM-DK FBS-EUL KPS*		–	–	200	*See table*
	42	0...1		**Pressure piece SV** *(only for BS LM 4200)*	*For width adjustment ± 0.8 mm*		1	**818138**	20	**222041**
	43	0...1		**Pressure piece AV** *(only for BS LM 4200)*	*For width pressure adjustment ± 0.5 mm*		1	**855133**	20	**249796**

Design variations for coupling set FBS-G (31 - 33)

USH	X	Material no.
7 - 10 mm	≤ 8.5 mm	MMKL0030-100030
7 - 10 mm	≤ 7.5 mm	MMKL0010-100030
12 mm	≤ 7 mm	MMKL0040-100030

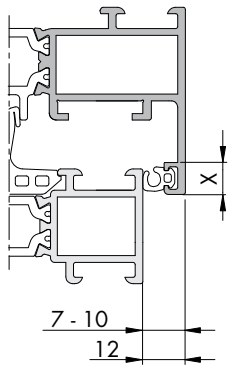

Design variations for handle support (41)

USH	Z	X _ < 7 mm	X 7.1 - 8.5 mm
7 - 10 mm	< 2 mm	MFHA0010-100200	MFHA0010-100200
7 - 10 mm	2.1 - 3 mm	MFHA0010-100200	MFHA0020-100200
7 - 10 mm	> 3 mm	MFHA0010-100200	-
12 mm	-	MFHA0030-100200	-

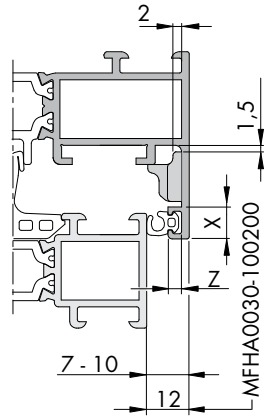

Klik op een artikelnummer om het artikel op kozijnparts.nl te bekijken. Blauw onderstreept = klikbaar.

Nederlandse vertaling

Siegenia - Nederlandse vertaling

Bron: Siegenia ALU-planningshandboek LM 5200 / LM 4200 / axxent (Engels), Duits, blz. 45, 47, 124. Vertaling Kozijn Parts.

Dit artikel: MMKL0030-100010 (in de bladen hiervoor geel gemarkeerd)

Siegenia handboek blz. 45 - ALU 5200-DK BD 3.5 (FBS-G), Hardware overview

Hardware overview ALU 5200-DK BD 3.5 (FBS-G)	beslagoverzicht ALU 5200 draai-kiep, scharnierdoorgang 3,5 mm, met anti-foutbediening bij de kruk (FBS-G)
H1 / H2: items 28, 29, 30 = coupling set (coupling bracket, cheese head screws, mishandling device)	H1 / H2 (kruk Si-line of Globe): posities 28, 29, 30 = koppelset (koppelbeugel, cilinderschroeven, anti-foutbediening)
H3 / H4: gear set FBS	H3 / H4: kruk met ingefreesde aandrijving met anti-foutbediening
Torque and tooling information	aanhaalmomenten en gereedschap

Siegenia handboek blz. 47 - ALU 5200-DK BD 3.5 (FBS-G), Assembly and design variants for coupling set

Design variants for coupling set (items 28-30) (H1/H2): USH / X / Material no.	uitvoeringen koppelset (posities 28-30) bij kruk H1/H2: overslaghoogte vleugel (USH) / maat X / artikelnummer
7 - 10 mm / ? 8.5 mm / MMKL0030-100030	overslag 7-10 mm, maat X max. 8,5 mm: MMKL0030 (9 mm)
7 - 10 mm / ? 7.5 mm / MMKL0010-100030	overslag 7-10 mm, maat X max. 7,5 mm: MMKL0010 (10 mm)
12 mm / ? 7 mm / MMKL0040-100030	overslag 12 mm, maat X max. 7 mm: MMKL0040 (USH 12 mm)
Observe installation sequence; sequence of installation in sash	let op de montagevolgorde in de vleugel (zonder middensluiting 3-4, met middensluiting 1-2-3-4)
Attention: carefully press in hinge pin as far as stop - do not hammer it in! Grease socket - do not oil it!	let op: scharnierpen voorzichtig tot de aanslag indrukken, niet inslaan; smeernippel invetten, niet oliën

Siegenia handboek blz. 124 - LM 4200-DK Hardware list (LMen1362 blz. 3)

31-33 0...1 Coupling set FBS-G 9 mm MMKL0030 / 10 mm MMKL0010 / USH 12 mm MMKL0040 (1 piece -100010, 20 pieces -100030)	pos. 31-33, optioneel: koppelset met anti-foutbediening bij de kruk, 9 / 10 / 12 mm (per stuk -100010, per 20 -100030)
Design variations for coupling set FBS-G (31 - 33): USH / X	uitvoeringen koppelset: kies op overslaghoogte (USH) en maat X, zie de tabel
21-28 VS LM-DK FBS-EUL KPS / VS LM-DK KPS	pos. 21-28: sluitzijde-set draai-kiep (met of zonder anti-foutbediening in de hoekoverbrenger)
Stay LM 4200 / additional stay / MV / pressure pieces	schaar, extra schaar, middensluiting, drukstukken