A = 2170 mm

B = 754 mm

C = 736 mm

D = 35 mm

E = 92 mm

F = 361 mm

G = 1020 mm

H = 338 mm

I = 300 mm

K = 140 mm

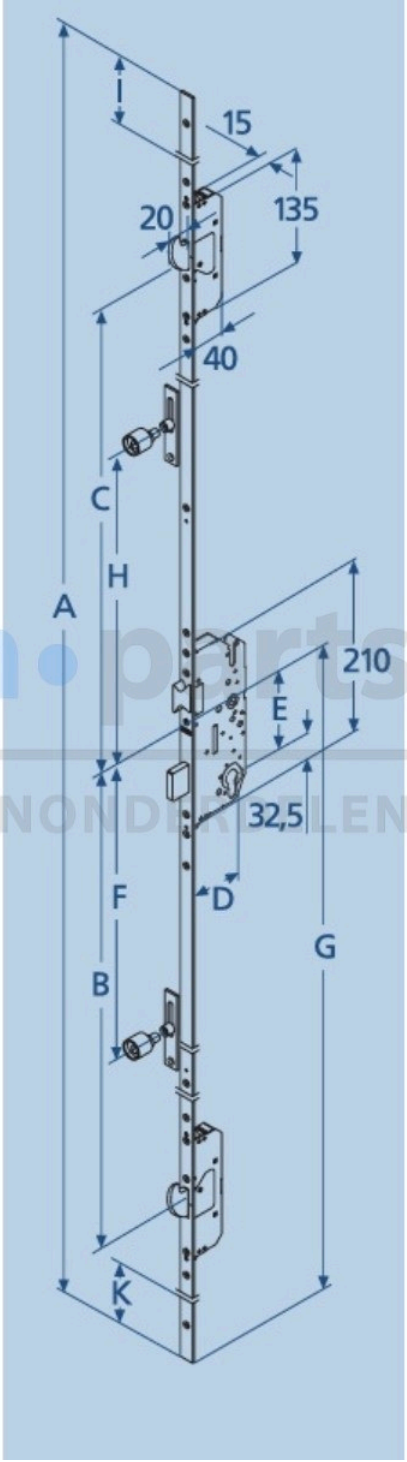

kozijn parts
EXPERT IN KOZIJNONDERDELEN